North Sea Electronics

User Manual

Product:

NSE Firmware Loader (Software)

REVISION HISTORY

REV	DATE	DESCRIPTION	PREP	APPR	COMPANY
A	2016.07.28	Initial	EHJ	GLK	NSE

PAGES DOCUMENT: **12** PAGES APPENDICES: 0

NSE DOCUMENT NUMBER: NSE-650001-001

North Sea Electronics AS
Gravdalsveien 245, N-5164 Laksevåg, Norway
E-mail: mail@nse.no
Comp. Reg. No.: NO987774002MVA

This page is intentionally left blank

Table of contents

1 ABBREVIATIONS 4

2 OVERVIEW 4

3 NSE BOOTLOADER PROTOCOL VERSIONS 4

4 INTERCONNECTION OF HARDWARE 4

4.1 COMMUNICATION HARDWARE 4
4.2 TOPSIDE TELEMETRY – (USB) 4
4.2.1 Connections 4
4.3 DOWNHOLE TELEMETRY – (UART 3.3 TTL) 5
4.3.1 Connections 5
4.4 NSE NODES (CANBUS) 7
4.4.1 Connections 7
4.5 NSE NODES (RS-485) 7
4.5.1 Connections 7

5 USING THE NSE FIRMWARE LOADER 8

5.1 SW INSTALLATION 8
5.2 ACQUIRING UPDATED FIRMWARE 8
5.3 CONNECT HARDWARE TO BE UPDATED 8
5.4 STARTING THE NSE FIRMWARE LOADER 8
5.5 LOADING NEW FIRMWARE 8
5.5.1 Verify correct startup configuration 9
5.5.2 Select desired COM/CAN port and baud/bit rate in COM menu. 9
5.5.3 Select firmware 9
5.5.4 Connecting to the bootloader 10
5.5.5 Updating the firmware 10

1 Abbreviations

GUI	Graphical User Interface
LSB	Least Significant Bit
MSB	Most Significant Bit
NSE	North Sea Electronics
FW	Firmware
SW	Software

2 Overview

This document describes the process of installing new firmware to NSE nodes and telemetry units when a bootloader is pre-installed on the target node. The bootloader enables us to download new firmware without using a chip programmer. Instead, it is possible to connect with the UART/CAN port of the device using a USB/UART adapter or USB/CAN adapter and the NSE Firmware Loader.

3 NSE bootloader protocol versions

There are two bootloader protocol versions compatible with the NSE Firmware Loader.

- Bootloader 1.x. compatible with NSE telemetry units that have a preinstalled bootloader.
- Bootloader 2.x. compatible with all other NSE hardware (DCDC units, motor drivers and similar) with preinstalled bootloader.

4 Interconnection of hardware

4.1 Communication hardware

- For CAN-bus devices use NI USB-8473 (**REQUIRED brand/type**) (http://sine.ni.com/nips/cds/view/p/lang/en/nid/203384)
- For RS-485 devices use NSE USB2Serial device or equivalent. (http://www.nse.no/article/471/Galvanic_Isolated_USB_to_Serial_Converter)
- For 3.3V TTL UART devices use NSE USB2Serial device or equivalent. (http://www.nse.no/article/471/Galvanic_Isolated_USB_to_Serial_Converter)

4.2 Topside Telemetry – (USB)

In order to update the firmware on a topside telemetry unit, it must be connect to a PC with the NSE Firmware Loader installed.

4.2.1 Connections

The connection of the PC to the topside modem is shown in figure below. The topside connection is straightforward. Connect a USB cable from the PC, to the USB2/Status port on the back of the modem.

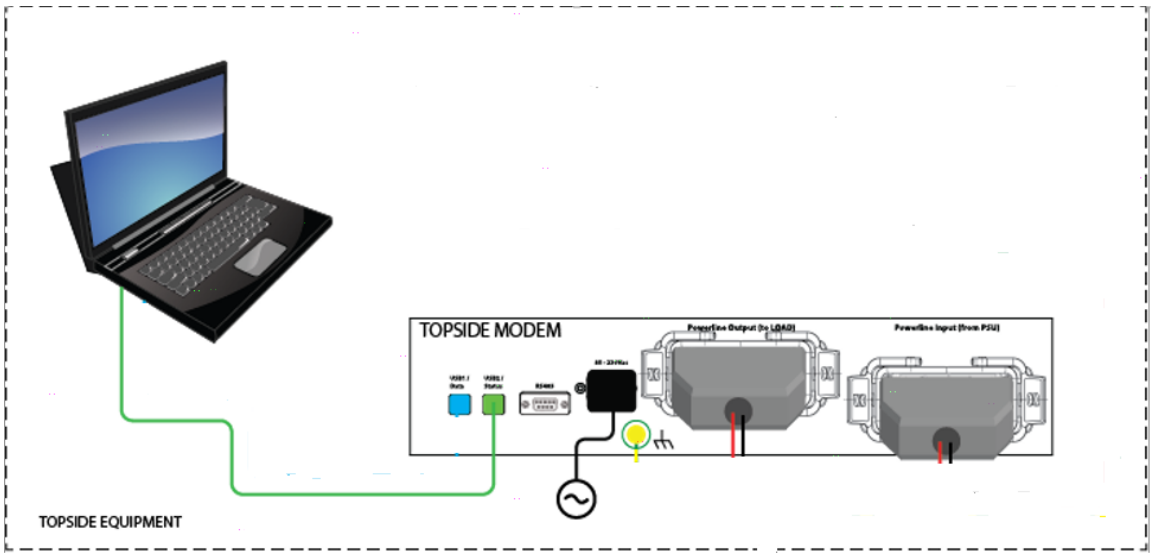

Connection of PC to TS modem status port.

4.3 Downhole Telemetry – (UART 3.3 TTL)

In order to update the firmware on the downhole telemetry unit, it must be connect to a PC with the NSE Firmware Loader installed.

4.3.1 Connections

For downhole modem you will need an USB to **3.3V TTL** serial converter, (Recommended: Part.nr. NSE-3082 - USB to 232-485-TTL) and necessary cabling. Connect the PC to the downhole modem as shown in the figure below.

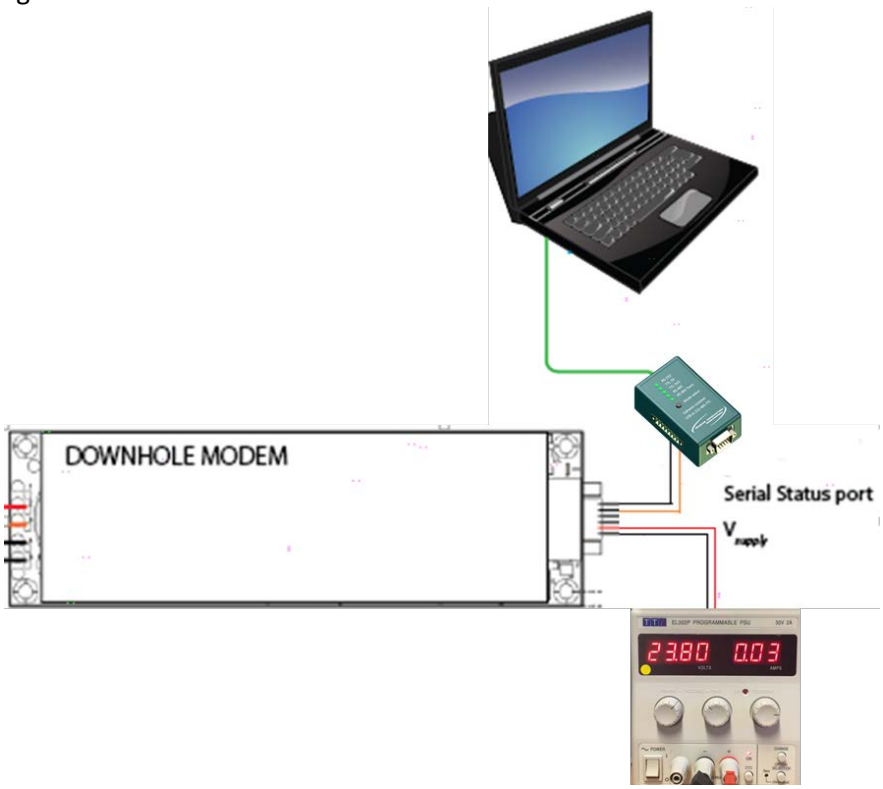

Connection of PC to DH modem status port by use of USB to 232-485-TTL converter

The cabling kit should serve two purposes:

- Supply the DH modem with +24V DC
- Connect the serial interface between the converter and DH modem. The DH modem uses a 9 pin Glenair connector with pinning shown below.

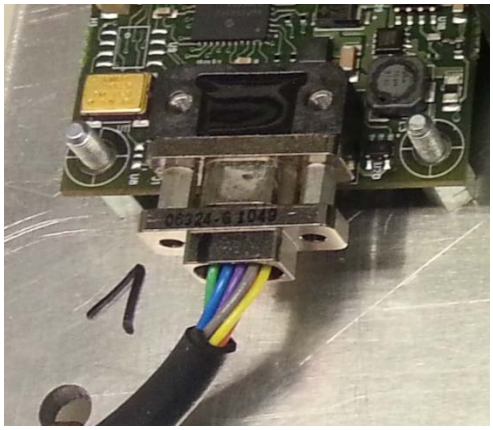

Figure 1 Signal connection DH.

Apply +24V DC between pin 9 and pin1 (GND) and for serial communication use Serial2, pin 6, 7 & 5(GND) to the board according to pinning below.

PIN	Function	Connector pinout
1	GND	
2	Serial1 Tx	
3	Serial1 Rx	
4	NC	
5	GND	
6	Serial2 Tx / CANH	
7	Serial2 Rx / CANL	
8	NC	
9	Vin (DC)	

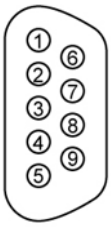

M83513-A01CP
Downhole Modem
Connector

Make the connections as described and make sure that the “USB to 232-485-TTL” converter is in the **TTL 3V3** mode by using the “Mode Select” button. The converter pinning are written on the box and make sure to match the Glenair serial wires with the TTL Rx and TTL Tx terminals on the converter.

4.4 NSE nodes (CANbus)

In order to update the firmware on a NSE CANbus node, it must be connect to a PC with the NSE Firmware Loader installed.

4.4.1 Connections

The connection of the PC via CANbus adapter is shown in figure below. Updating firmware via CANbus, requires an USB to CAN adapter of type NI-USB 8473 (National Instruments).

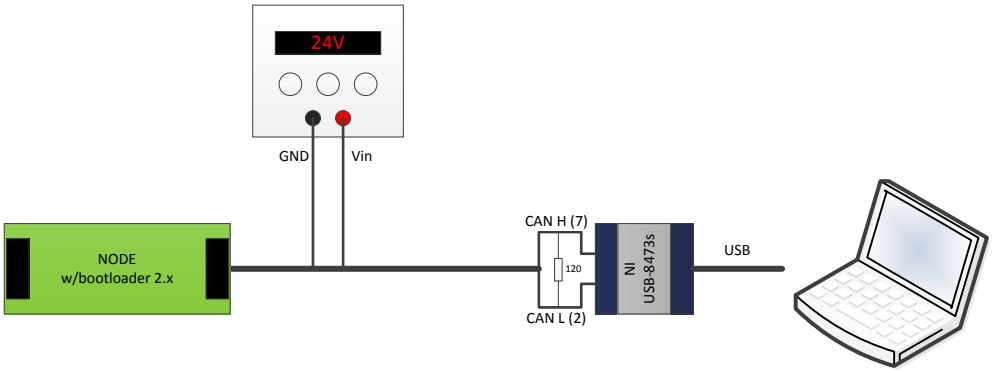

Figure 2 - Connection of PC to node

For pin-out, supply voltage, and other connection details, check the documentation for the specific node.

4.5 NSE nodes (RS-485)

In order to update the firmware on a NSE node with RS-485 interface, it must be connect to a PC with the NSE Firmware Loader installed.

4.5.1 Connections

Connect the PC via a RS-485 converter as shown in figure below.

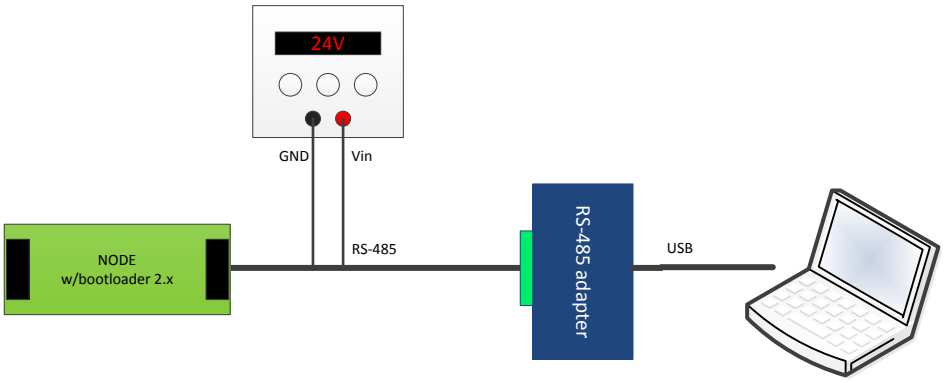

Figure 3 - Connection of PC to node

For pin-out, supply voltage, and other connection details, check the documentation for the specific node.

5 Using the NSE Firmware Loader

5.1 SW Installation

- Download the latest revision software from: http://nse.no/page/4697/DRIVERS_SW_FW
- Unzip the file, run the NSE Firmware Loader Setup file and follow the installer instruction. You may be prompted to uninstall a previous version during installation. This must be done manually, using the windows uninstallation utility.

In order to use CANbus for FW updating, a NI-USB 8473(s) adapter is needed. The drivers for this unit must be installed separately, and can be found at http://www.ni.com/download/ni-can-15.0/5606/en/

Note: For NSE Firmware Loader v1.1.4 and older, these drivers must be installed, regardless of whether CANbus is used or not.

When the software is successfully installed, two shortcuts are added to the system, one for each protocol.

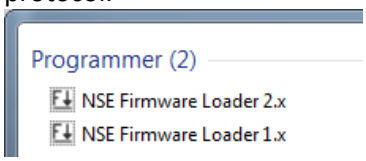

5.2 Acquiring updated firmware

If updated firmware is available for a product, this will be distributed by NSE in the form of ".nse" files. These files can be directly read by the NSE Firmware Loader, and applied to connected hardware.

5.3 Connect hardware to be updated

For how to connect the hardware that is to have its firmware updated, refer:

- Chapter 4.2 and 4.3 for Telemetry units
- Chapter 4.4 for CANbus nodes
- Chapter 4.5 for RS-485 nodes

5.4 Starting the NSE Firmware Loader

For updating Telemetry unit, use the "NSE Firmware Loader 1.x" shortcut to start the program.
For updating other NSE node(s), use the "NSE Firmware Loader 2.x" shortcut to start the program.

5.5 Loading new Firmware

To load new firmware, follow the following steps:

5.5.1 Verify correct startup configuration

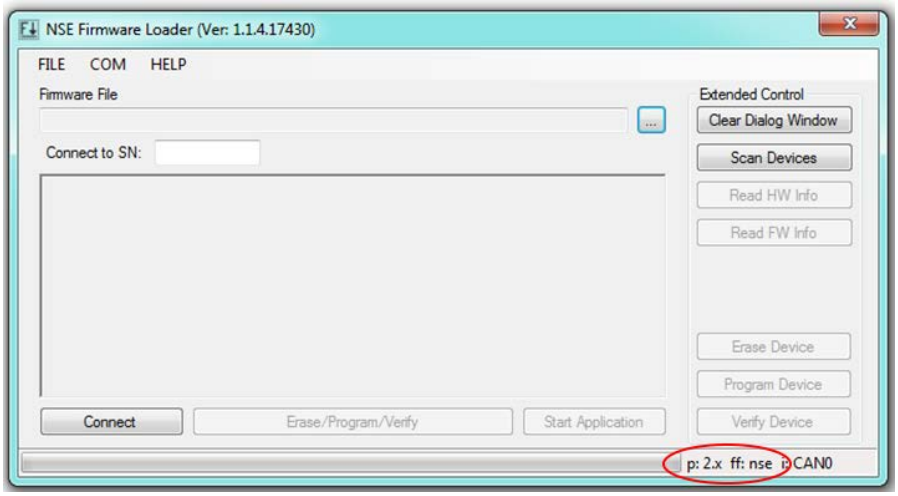

In the lower right corner, the software mode is displayed, verify correct settings.

- If working with a telemetry unit, it should be: "p: 1.x ff: nse"
- If working with another NSE node, it should be: "p: 2.x ff: nse"

5.5.2 Select desired COM/CAN port and baud/bit rate in COM menu.

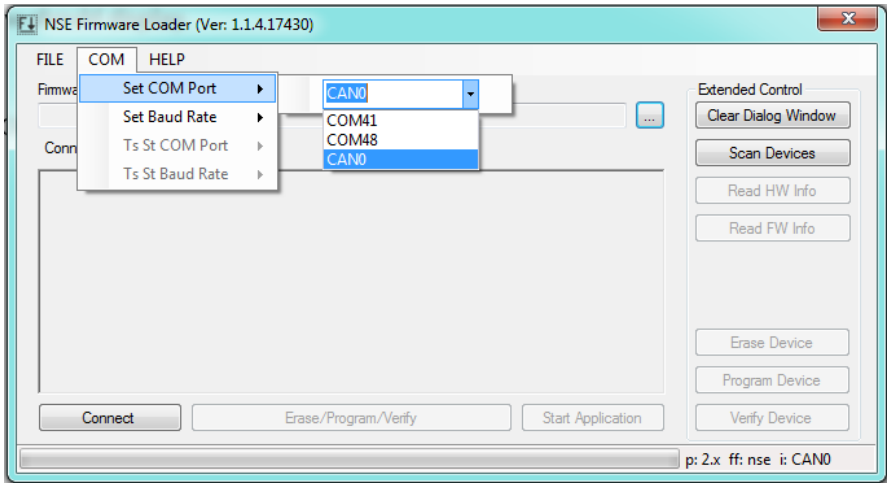

- If working with a telemetry unit, the COM port should always be a "COM#" port, and the baud rate 38400.
- If working with other NSE hardware, the COM Port can either be "COM#" or "CAN#" depending on the node, check the documentation for the specific node, to see which.
    - When using a CAN# port, the baud rate should be 125000.
    - When using a COM# port, the baud rate should be 38400.

5.5.3 Select firmware

Press the "…" button to open the file dialog window, and select desired NSE firmware file (.nse file) to load.

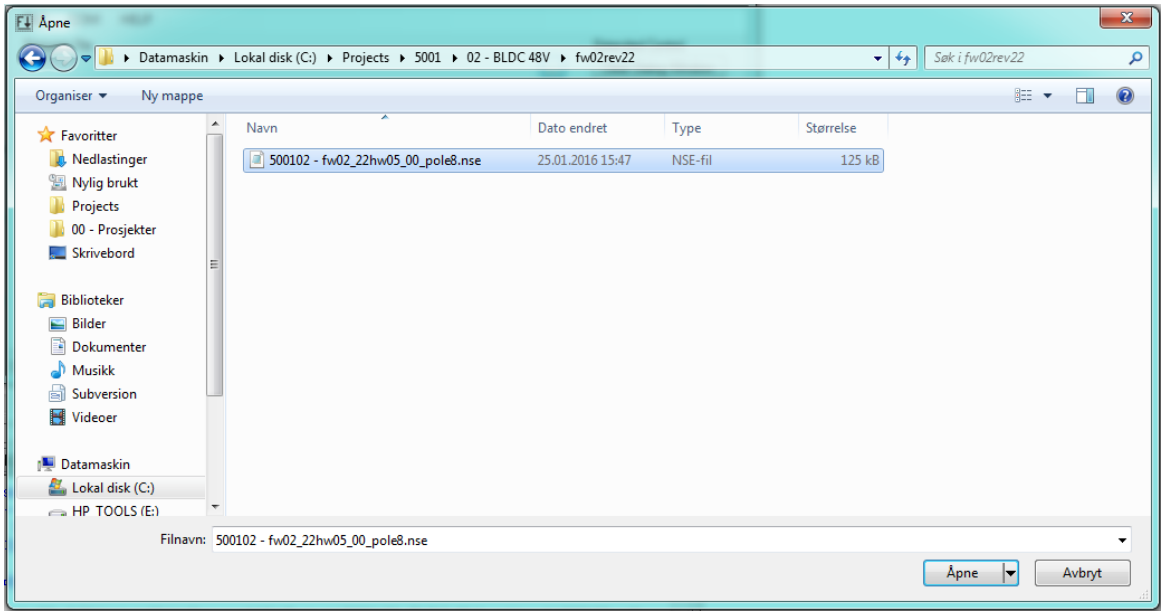

5.5.4 Connecting to the bootloader

For all NSE hardware with bootloader, the default procedure for connecting to the node is to connect during boot. When doing this, only one unit should be connected at a time.

- Shortly after putting power to the node, press “Connect” (within 2 seconds for most nodes). Leave the “Connect to SN” field blank

Some non telemetry nodes can be put into firmware update mode without cycling the power. Check the documentation for the specific node, to see if this is supported.

- Enter the node’s serial number in the “Connect to SN” field. Press “Connect”.

Once a connection to the bootloader is established, a message with the bootloader version and the serial number of the connected unit is shown.

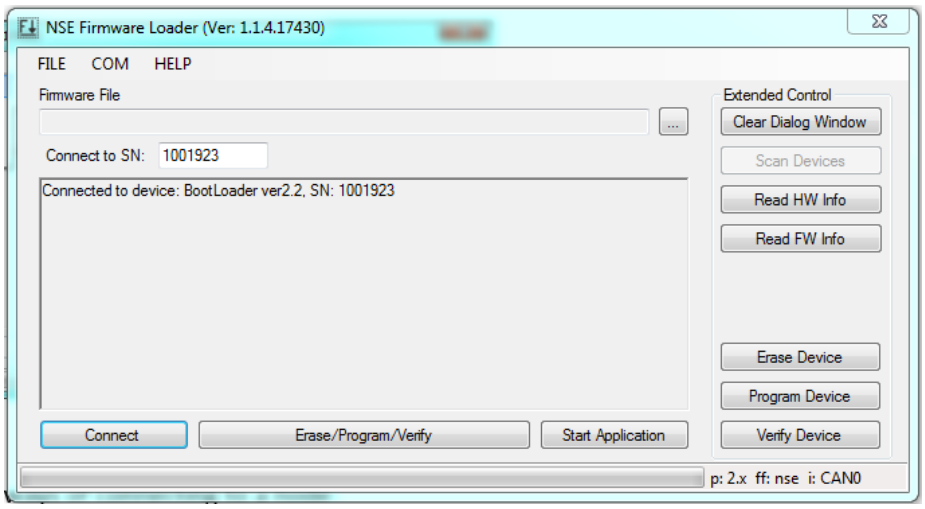

The unit is now ready to have its FW updated.

5.5.5 Updating the firmware

Press the “Erase/Program/Verify” button to start loading new firmware to the device.

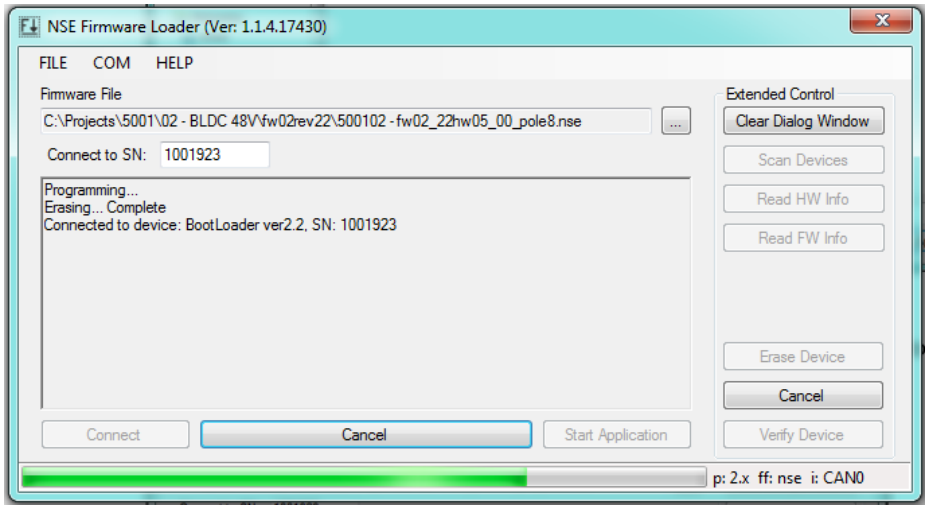
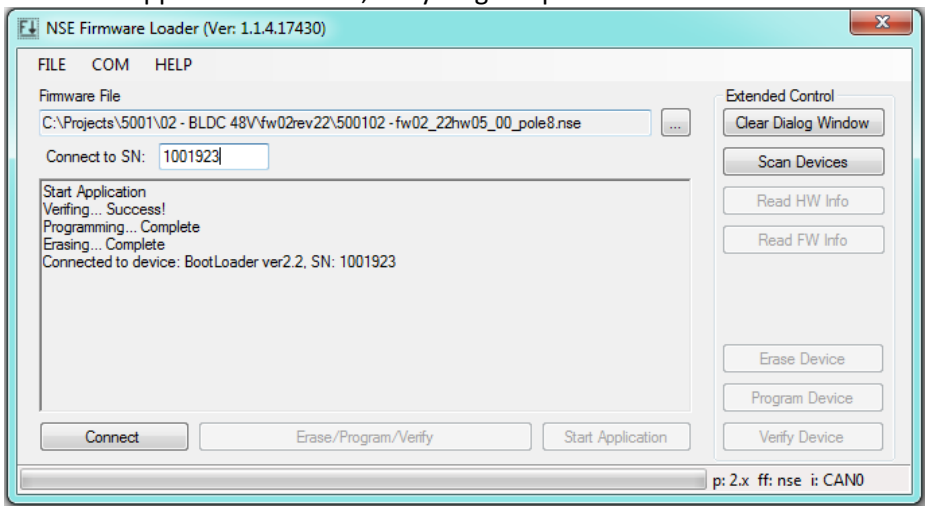
Once the text "Verifying… Success!" is shown, the application firmware can be started by pressing the "Start Application" button, or cycling the power of the unit.